Wall Mount Bracket

LTB301-C

(130mm Camera Mount)

Suitable for Camera series:
CMIP10-- / CMIP30-- / CMIP33--
CMIP38--
CMHT17-- / CMHT18--

Optional Back-Box
(**LTB-110-BB**)

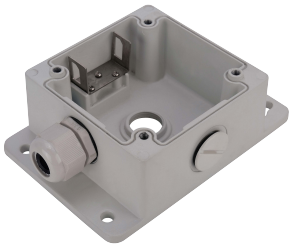

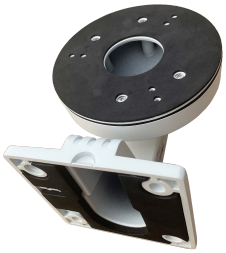

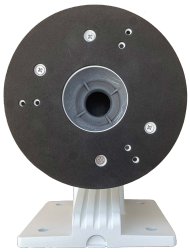

Properties	
Description	Wall-Mount bracket
Construction	Aluminum Alloy - Powdercoated
Dimension	182(L) × 130(W) × 120mm(H)
Weight	720g

Technical Specifications:

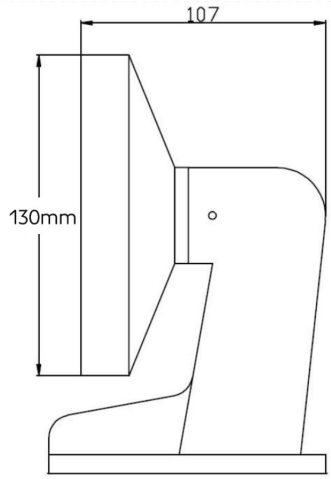

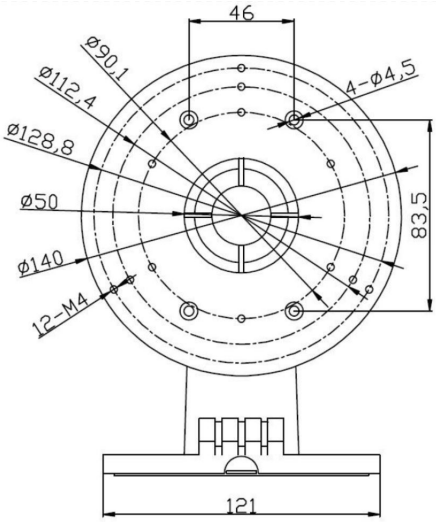

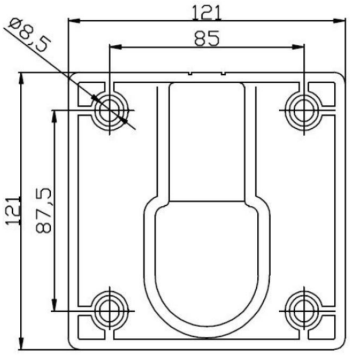

©2015 LT Security, Inc. All Rights Reserved. White papers, data sheets, quick start guides, and/or user manuals are for reference only and may or may not be entirely up to date or accurate based upon the version or models. Product names mentioned herein may be the unregistered and/or registered trademarks of their respective owners.